The adsorption of azaaromatics on alumina: a comment on the paper of Klemm, Kloppenstein and Kelley

KLEMM, KLOPPENSTEIN AND KELLEY in a recent paper[1] have reported an extensive tabulation of R_F values for the TLC separation on alumina of various azaaromatics related to pyridine. On the basis of these data these authors conclude that "...we continue to favor the concept of preferential edgewise adsorption of many azarenes...", a proposal first put forward by KLEMM *et al.* in 1961[2]. The hypothesis of edgewise adsorption in this chromatographic system has been challenged by the present author[3–5], on the basis of a theoretical analysis of a large body of linear isotherm retention volume values from column chromatography studies. If (and only if) planar adsorption is assumed, it is possible to quantitatively predict retention volumes for numerous pyridine derivatives by means of a previously developed theoretical equation. KLEMM *et al.*[1] question the validity of the latter equation in the adsorption of the azaaromatics, however: "This equation has been rigorously tested for aromatic hydrocarbons... (but) the applicability of this equation to the clarification of the geometry of adsorption of relatively non-hindered azarenes is more equivocal and seems not to have been rigorously tested".

The final test of any theory or correlational equation is in its ability to quantitatively account for a particular set of relevant experimental data. Since the comparisons offered by KLEMM *et al.*[1,2] are essentially of a qualitative nature, while the preceding analysis of the author[3–5] is quantitative, and since the quantitative data reported by the author are totally incompatible with nonplanar adsorption of the azaaromatics, the concept of nonplanar adsorption would seem to be clearly refuted. In the present communication we propose to show that our previous theoretical treatment (based on planar adsorption) is capable of quantitatively predicting the R_F values recently reported by KLEMM *et al.*[1] for the azaaromatics. This further verifies the validity of our treatment in the case of the azaaromatic adsorbates and supports the underlying premise that these compounds adsorb in the plane of the alumina surface. We also hope to clarify some of the misunderstanding that has arisen concerning the configuration of the adsorbed azaaromatics.

For linear isotherm retention volumes $\underline{R}^\circ$ (ml/g) in column chromatography it has been shown (ref. 6 and prior references) that

$$\log \underline{R}^\circ = \log V_a + \alpha(S^\circ - \varepsilon^\circ A_s) + \Sigma\Delta_{eas} \qquad (1)$$

Here V_a and α are adsorbent parameters determined by the alumina activity, S° is the adsorption energy of the solute (adsorbate) in a standard system, A_s is the cross-sectional area of the solute, ε° is the adsorption energy of the eluent per unit area of surface (eluent strength), and the term $\Sigma\Delta_{eas}$ arises from certain "anomalous" adsorption effects which can be ignored here (*i.e.*, $\Sigma\Delta_{eas}$ equal zero). S° can in turn be expressed as a function of solute structure:

$$S^\circ = \sum^{i} Q^\circ_i + \sum^{j} q^\circ_j - f(Q^\circ_k) \sum^{i \neq k} Q^\circ_i. \qquad (2)$$

Q°_i refers to the adsorption energy of each solute group i, q°_j refers to a contribution to solute adsorption energy by interaction of two solute groups in a particular

geometry j, and $f(Q^\circ_k)$ is a localization function dependent upon the adsorption energy Q°_k of the strongest adsorbing solute group k (see Table II of ref. 3 for a list of values of $f(Q^\circ_k)$ *versus* Q°_k). For the unsubstituted or methyl substituted azaaromatics (as reported by KLEMM *et al.*[1]) Q°_i for all aromatic carbons (—C=) equals 0.31, for methyl substituents Q°_i equals 0.06, and for the nitrogen atom(s) Q°_i (or Q°_n) is dependent upon the adjacent substituents. Values of Q°_n for a number of nitrogen atom configurations have been tabulated (Table I of ref. 5), other values are reported in ref. 4, and still other values may be calculated from Figs. 2 and 3 of ref. 4. The only important q°_j terms in the present series of azaaromatics are those due to electronic activation of the nitrogen atom by a methyl group or another nitrogen atom contained in the same molecule[5]. For the azaaromatics studied by KLEMM *et al.*[1] we may rewrite eqn. (2) as follows:

Monoazaaromatics

$$S^\circ = Q^\circ_n + 1.86 + [1 - f(Q^\circ_k)]\,[0.06\, n_m + 0.31\,(n_a - 6)] + \sum^m C_e\, Q^\circ_n \qquad (2a)$$

Diazaaromatics

$$S^\circ = Q^\circ_n + 1.86 + [1 - f(Q^\circ_k)]\,[0.06\, n_m + 0.31\,(n_a - 6) + Q^\circ_{n'}] + \\ + \sum^m C_e\, Q^\circ_n + \sum^m C_e\, Q^\circ_{n'} + C_{e'}\,[Q^\circ_n + f(Q^\circ_k)\, Q^\circ_{n'}] \qquad (2b)$$

Here n_m and n_a refer, respectively, to the numbers of methyl groups and aromatic carbon atoms in the solute; $Q^\circ_{n'}$ is the Q°_i value of the less strongly adsorbed nitrogen atom in a diazaaromatic. The terms $\sum^m$ are summations over all methyl groups. The electronic interaction parameter C_e depends upon the relative positions of a methyl group and the nitrogen atom with which it is interacting:

for *ortho* or *para* methyls in the ring of the nitrogen, $C_e = 0.095$
for *meta* methyls in the ring of the nitrogen, $C_e = 0.039$
for methyls in a ring adjacent to the ring of the nitrogen, $C_e \cong 0.034$.

The last term of eqn. (2b) can be estimated from the data of Table II of ref. 5; in the case of pyrazine derivatives, $C_{e'} \cong -0.42$. Eqns. (1) and (2) may be applied to TLC systems by means of the well known, approximate relationship (see refs. 7 and 8)

$$R_F\, f(g) = \frac{1}{1 + (W_a/V_s)\underline{R}^\circ} \qquad (3)$$

where R_F and $\underline{R}^\circ$ are values from analogous thin-layer and column systems (same adsorbent activity, same eluent) for the same solute, W_a and V_s are the weight of adsorbent and volume of solvent (eluent) in a given volume of plate or column, and $f(g)$ is a constant (ideally equal one) for a given TLC system, normally equal to 1.1 $f(g)$ values greater than one arise from variations in the ratio W_a/V_s in the direction of solvent flow on a plate (solvent gradient). With pre-equilibration of the plate in the solvent chamber, as practiced by KLEMM *et al.*[1] the *effective* solvent gradient will be increased, with increase in $f(g)$. In agreement with this expectation, it was found that a best fit of eqn. 3 to the data of KLEMM *et al.* gives $f(g)$ equal 1.25 for chloroform–

TABLE I

CALCULATION OF R_F VALUES OF AZAAROMATICS IN SYSTEMS OF KLEMM *et al.*[1]

Solute[a]	Q°_n	S°	A_s[b]	$(S^\circ - \varepsilon^\circ A_s)$	R_F	
					Exptl.	*Calc.*[c]
1, I	—	4.34	11.6	0.05	0.78	0.79
2, I	0.7[d]	7.22	16.0	1.30	0.71	0.73
3, I	0.7[d]	7.11	15.0	1.56	0.70	0.70
4, I	0.7[d]	7.01	14.0	1.82	0.70	0.66
5, I	0.7[d]	5.97	12.0	1.53	0.68	0.71
7, I	2.3[d]	6.65	12.0	2.21	0.64	0.59
10, I	2.3[d]	5.85	10.0	2.15	0.59	0.70
15, I		6.5[e]	10.0	2.80	0.47	0.44
16, I	3.3[f]	7.22	13.0	2.41	0.45	0.54
17, I	3.3[f]	7.44	14.0	2.26	0.44	0.58
18, I	3.8[d]	6.46	10.0	2.74	0.41	0.45
19, I	3.8[d]	6.91	12.0	2.47	0.41	0.53
20, I	3.8[d]	7.02[g]	12.0	2.58	0.41	0.50
21, I		6.0[e]	8.0	3.04	0.40	0.37
22, I	3.8[d]	6.85	10.0	3.15	0.39	0.34
23, I	3.8[d]	7.02	11.0	2.95	0.37	0.39
24, I	4.0[d]	6.49	10.0	2.79	0.36	0.44
25, I	4.0[d]	8.29[h]	13.6	3.26	0.35	0.31
26, I	3.3[f]	6.36	9.5	2.84	0.34	0.42
27, I	4.0[d]	6.37	8.0	3.41	0.33	0.27
28, I	4.0[d]	7.05	10.0	3.35	0.33	0.28
29, I	4.0[d]	7.05	10.0	3.35	0.32	0.28
30, I	4.0[d]	7.73	12.0	3.29	0.30	0.30
31, I	4.0[d]	7.73	12.0	3.29	0.30	0.30
32, I		7.6[e]	10.0	3.90	0.25	0.15
33, I	4.8[d]	8.40[h]	11.6	4.10	0.24	0.12
34, I	4.8[d]	6.89[g]	9.6	3.34	0.21	0.28
35, I	4.8[d]	8.40[h]	11.6	4.10	0.18	0.12
37, I		7.6[i]	9.6	4.05	0.16	0.13
38, I	4.0[d]	9.66[j]	14.0	4.48	0.13	0.08
39, I	7.4[k]	10.3[e]	10.0	6.60	0.01	0.00
40, I	7.4[k]	10.87	12.0	6.43	0.01	0.01
41, I	7.4[k]	11.40	12.0	6.96	0.00	0.00
42, II	0.7[d]	7.62[l]	19.6	—2.0	0.69	0.70
43, II	0.7[d]	5.14[l]	15.6	—2.5	0.69	0.70
45, II	3.8[d]	6.92[l]	15.6	—0.7	0.68	0.70
22, II	3.8[d]	6.85	10.0	1.95	0.66	0.67
27, II	4.0[d]	6.37	8.0	2.45	0.65	0.65
48, II		8.3[e]	10.0	3.40	0.63	0.54
51, II		7.0[e]	8.0	3.08	0.55	0.59
54, II		7.7[e]	8.0	3.78	0.52	0.47
56, II	5.5[d]	8.26	9.0	3.85	0.50	0.45
57, II		8.7[e]	8.0	4.78	0.24	0.24
39, I		10.3[e]	10.0	5.40	0.02	0.12

(*Continued on page 435*)

Table 1 (continued)

Solute[a]	Q°_n	S°	A_s[b]	$(S^\circ - \varepsilon^\circ A_s)$	R_F	
					Exptl.	Calc.[c]
61, III	2.71[m]	5.36	9.0	2.03	0.56	0.67
62, III	2.71[m]	5.66	10.0	1.96	0.53	0.68
65, III	3.8[d]	6.56	9.0	3.23	0.45	0.40
66, III	3.8[d]	6.73	10.0	3.03	0.43	0.45
67, III	4.0[d]	6.37	8.0	3.41	0.42	0.35
68, III	4.0[d]	6.54	9.0	3.21	0.39	0.40
69, III	3.8[d]	6.96	10.0	3.26	0.39	0.39
70, III	4.0[d]	6.54	9.0	3.21	0.39	0.40
72, III	4.0[d]	6.78	9.0	3.45	0.37	0.33
73, III	4.0[d]	6.78	9.0	3.45	0.35	0.33
74, III	4.0[d]	6.78	9.0	3.45	0.34	0.33
75, III	4.0[d]	6.95	10.0	3.25	0.33	0.39
76, III	4.8[d]	7.17	8.0	4.21	0.32	0.15
51, III		7.0[e]	8.0	4.04	0.29	0.19
54, III		7.7[e]	8.0	4.74	0.12	0.08

[a] Arabic numerals refer to solute (numbering system of KLEMM *et al.*[1]); roman numerals refer to chromatographic system (Table numbers of KLEMM *et al.*[1]): I = benzene–chloroform (1:1), 4.0% H_2O–Al_2O_3; II = butanone-2, 8.8% H_2O–Al_2O_3; III = benzene–chloroform (1:1), 4.4% H_2O–Al_2O_3.

[b] A_s values calculated as described in ref. 12 unless otherwise noted.

[c] From eqns. 2a, 2b, 3, and 4, assuming the following parameters:

System	Log V_a	α	ε°	f(g)
I	—1.85	0.63	0.37	1.25
II	—2.53	0.59	0.49	1.43
III	—2.00	0.62	0.37	1.25

[d] Table I (ref. 5).

[e] Table II (ref. 5).

[f] Figures 2 and 3 (ref. 4) ($Q^\circ_n = 1.13\ F_N$).

[g] For adsorption energy of phenyl group (and contribution to A_s), see ref. 14.

[h] f(Q°_k) for phenyl group equal 0.15 (rather than 0.45) because of separation of phenyl group from localized nitrogen (see Table I, ref. 5 and related discussion).

[i] S° calculation discussed in ref. 5.

[j] C_e' estimated equal to value for 1,5-diazaanthracene (Table II, ref. 5).

[k] Combined value of Q°_i for both nitrogen atoms (Table I, ref. 5).

[l] C_e' is estimated at 0.42 as in the case of *trans*-azobenzene (see ref. 5).

[m] Values reported in ref. 4 (Q°_n equal 1.13 F_N).

benzene solvent and 1.43 for 2-butanone solvent. As discussed previously[8] combination of eqns. 1 and 3 with the function R_M' defined equal to log [1/R_F f(g) — 1] gives

$$R_M' = \log (V_a W_a / V_s) + \alpha(S^\circ - \varepsilon^\circ A_s) \quad (4)$$

Application of eqn. (4) to the data of KLEMM *et al.*[1] yields the activity of the adsorbent used by these authors: Table I (ref. 1), 4.0% H_2O–Al_2O_3; Table II (ref. 1), 8.8% H_2O–Al_2O_3; Table III (ref. 1), 4.4% H_2O–Al_2O_3 (standard activity scale[8]). Assuming these three adsorbent parameters, it is possible to calculate R_F values in the system of KLEMM *et al.* for almost all of the azaaromatics (59 R_F values), using eqns.

(2a) or (2b) and (4). Table I summarizes these calculations along with pertinent details so that the steps involved may be easily followed. Similarly Fig. 1 compares experimental and calculated R_F values. The adequacy of these calculated R_F values is clearly evident from Fig. 1 and Table I. The standard deviation between the experimental and calculated R_F values (52 different azaaromatic solutes) is $\pm$ 0.065 R_F units. By way of evaluation, a similar correlation[8] of three previously reported TLC studies of hydrocarbons adsorbed on alumina[9-11] showed a standard deviation between experimental and calculated R_F values of $\pm$ 0.06 units. Thus it appears that the present

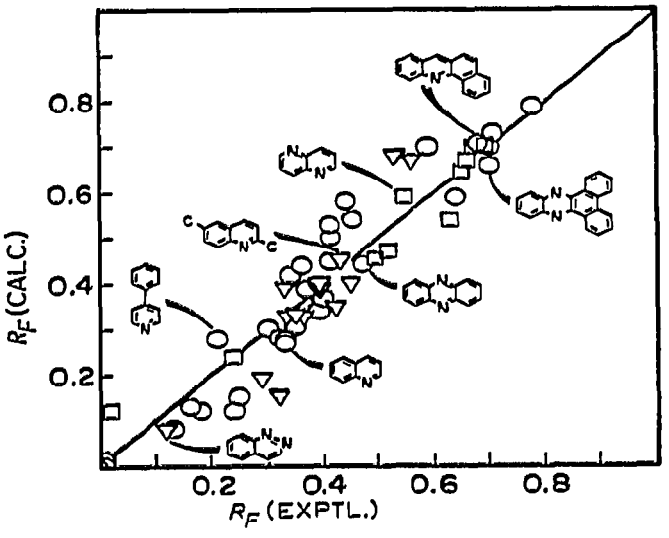

Fig. 1. Comparison of experimental and calculated R_F values. ○ Data of Table I (ref. 1): benzene–chloroform (1:1); □ data of Table II (ref. 1): butanone-2; ▽ data of Table III (ref. 1): benzene–chloroform, 1:1.

theoretical treatment is essentially equivalent in its ability to correlate or predict R_F values (and $\underline{R}^\circ$ values) in the case of both hydrocarbons and azaaromatics. If it is conceded that the present correlational equations have been "rigorously tested for aromatic hydrocarbons"[1], then their "applicability... to the clarification of the geometry of adsorption of... (the) azarenes"[1] seems likewise assured. The number of different compounds successfully treated by eqns. (1–4) is now actually greater in the case of the azaaromatics than for the hydrocarbons.

The present theoretical model (the basis of eqns. 1 and 2) requires that all adsorbing groups in the azaaromatics (*i.e.*, aromatic carbon atoms, nitrogen atoms) be immediately adjacent to the alumina surface, with negligible differences in the distances of various parts of the molecule from the surface. Any significant "tilting" must markedly lower the adsorption energies of solute groups which are moved away from the surface. Previous studies have shown that there is *no* tendency toward reduced adsorption energies for such groups (*e.g.*, *para* substituted pyridines[4], azaaromatics of similar nitrogen geometry and varying ring size[3,4], diazaaromatics with nitrogen atoms on opposite sides of the solute molecule[1,5]). Similarly previous studies have used the technique of "eluent variation"[12] to measure the area A_s required by large azaaromatics in adsorption on alumina; these areas are essentially identical with those calculated for planar adsorption, and markedly different from areas corresponding to edgewise adsorption. These prior studies plus the present correlation

of the data of KLEMM *et al.* appear to exclude completely the existence of tilted or edgewise adsorption in any of the fused azaaromatics, in the sense that certain solute atoms or groups are not immediately adjacent to atoms of the alumina surface. Actually none of the arguments of KLEMM *et al.*[1,2] have been addressed to this specific point. Rather these authors have emphasized the probability of involvement of the nitrogen *n* electrons in bonding to the alumina surface, and the corresponding preference for an Al–N bond in the plane of the azaaromatic molecule. With the latter point the present author is in essential agreement, as noted in ref. 4 (however the possibility of modest deformation of an *n* electron N–Al bond out of the plane of the solute molecule seems completely consistent with previous data). The apparent divergency of these two views of the configuration of the adsorbed azaaromatics ("planar" adsorption, N–Al bond in plane of solute molecule) results from an overly simple conception of the alumina surface: *i.e.*, a simple plane formed by one face of an alumina crystal. The actual picture of the alumina surface is doubtless considerably more complex; *e.g.*, recent workers have postulated[13] a defect structure for active aluminum sites. As KLEMM *et al.*[1] have themselves observed "...the terms 'flatwise' or 'edgewise' need not be mutually exclusive or contradictory for it is readily conceivable that a molecule may be adsorbed both ways simultaneously...". In conclusion, we favor just such a configuration of the adsorbed azaaromatics, one with all atoms of the molecule adjacent to what might be termed the "major" plane of the alumina surface, and the nitrogen atom bonded to an Al atom lying in a different plane. One such possibility in the case of adsorbed pyridine is illustrated in Fig. 2.

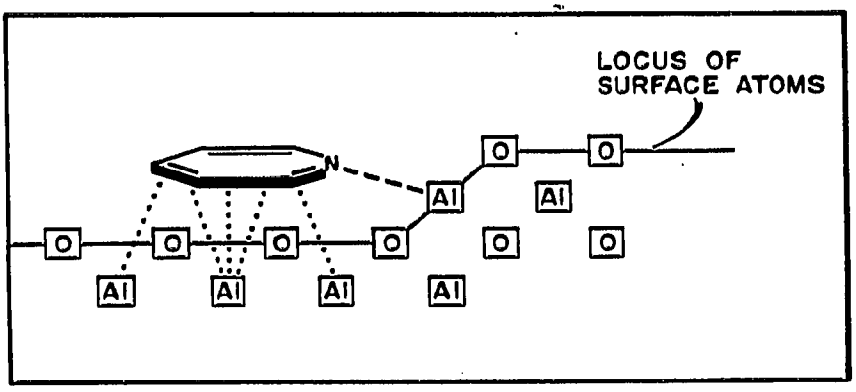

Fig. 2. Hypothetical representation of adsorbed pyridine on the alumina surface (cross-sectional view).

The author is grateful to Professor KLEMM for kindly making available a prepublication copy of his paper[1].

Union Research Center, Union Oil Company of California, Brea, Calif. (U.S.A.) L. R. SNYDER

REFERENCES

1 L. H. KLEMM, C. E. KLOPPENSTEIN AND H. P. KELLEY, *J. Chromatog.*, 23 (1966) 428.
2 H. KLEMM, E. P. ANTONIADES, G. CAPP, E. CHIANG AND E. Y. K. MAK, *J. Chromatog.*, 6 (1961) 420.
3 L. R. SNYDER, *J. Chromatog.*, 8 (1962) 319.

4 L. R. SNYDER, *J. Phys. Chem.*, 67 (1963) 2344.
5 L. R. SNYDER, *J. Chromatog.*, 17 (1965) 73.
6 L. R. SNYDER, *J. Chromatog.*, 20 (1965) 463.
7 M. BRENNER, A. NIEDERWIESER, G. PATAKI AND R. WEBER, in E. STAHL (Editor), *Thin-Layer Chromatography. A Laboratory Handbook*, Academic Press, New York, 1965, pp. 101–125.
8 L. R. SNYDER, *Advan. Chromatog.*, 4 (1967) 1.
9 G. B. CRUMP, presented before the *Am. Chem. Soc., New York Mtg., Sept. 8–13, 1963; Petroleum Div. Preprints.*, 8, No. 4, C-95.
10 I. OGNYAROV, *Compt. Rend. Acad. Bulgare Sci.*, 16 (1963) 265.
11 N. KUCHARCZYK, J. FOHL AND I. VYMETAL, *J. Chromatog.*, 11 (1963) 55.
12 L. R. SNYDER, *J. Chromatog.*, 8 (1962) 178.
13 J. B. PERI, *J. Phys. Chem.*, 69 (1965) 211, 220.
14 L. R. SNYDER, *J. Phys. Chem.*, 67 (1963) 240.

Received November 28th, 1966

A simple device for filling a chromatographic column

The methods generally used, besides being tedious and time-consuming, do not always provide a uniform filling. The device described below removes the drudgery of column filling and enables even a novice to effect efficient and rapid filling under anhydrous conditions.

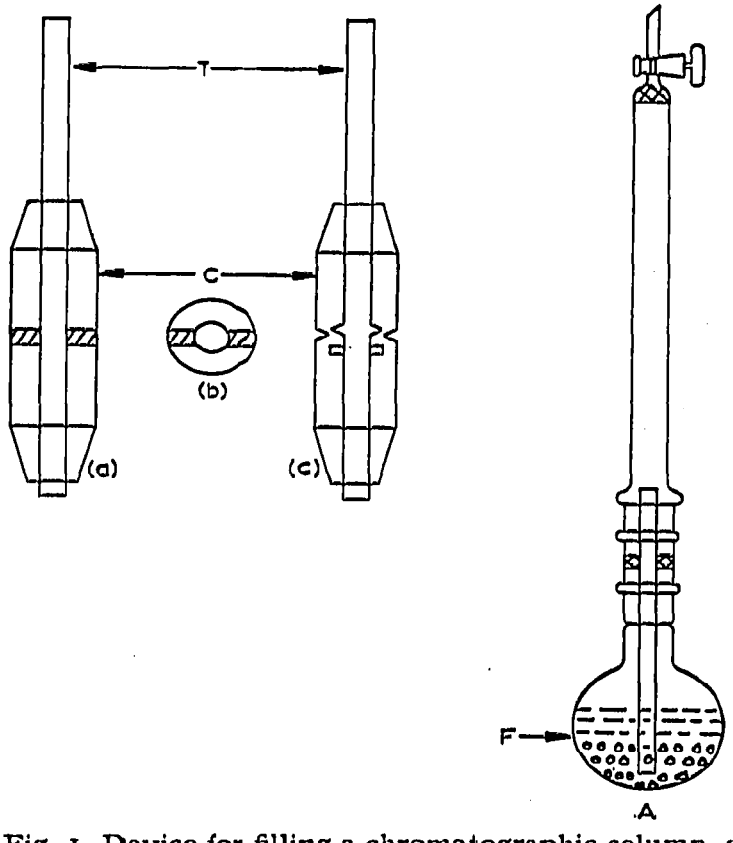

Fig. 1. Device for filling a chromatographic column. a and c = plan; b = sectional elevation. For further explanation of designations, see text.